Pass and Seymour

Discontinued - 32A Pin and Sleeve International Splashproof Inlet

Part No. 52972

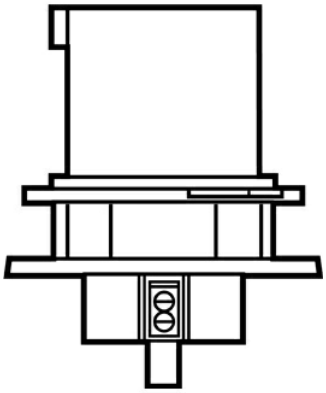

Double pole, Three wire, Inlet.• 32 amp, 380/415 volt. •

Features & Benefits

All P&S Watertight Pin & Sleeve plugs, connectors, receptacles, and inlets bring you the features to enhance versatility, reliability, and safety.

And all feature chemical-resistant thermoplastic construction.

An exclusive, hinged cord grip eliminates loose parts that get lost.

North American products come completely ready to wire, for quick, simple installation.

Shrouded, nickel-plated, solid-brass pins provide corrosion protection and excellent conductivity.

Specifications

General Info

Product Line	Pass & Seymour	Country Of Origin	France
Application Sector	Industrial	Standard	UL Listed

Technical Information

Phase	3	Number of Wires	3
Amperage	32 A	Number of Poles	Double Pole
Voltage	400.0 V		