Cablofil

FAS CENTER HANGER-PREGALV (6D,,2W,,18L) [586450]

Part No. 586450

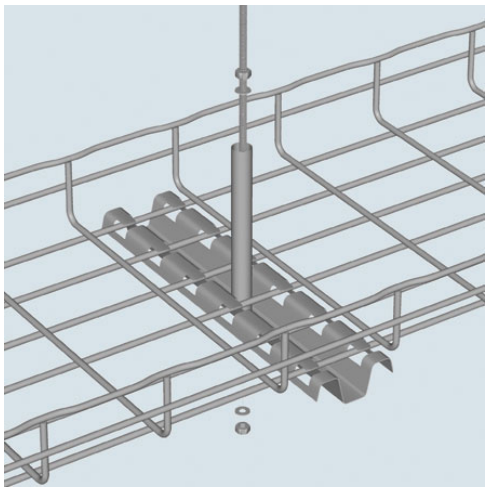

Cablofil Wiremesh Cable Tray concept based upon performance, safety and economy; three qualities which make Cablofil Wiremesh Cable Tray system preferred by installers. Cablofil adapts to the most complex configurations, and its structure gives maximum strength for minimum weight. The ease of creating fittings, carried out on site, as well as the wide range of unique and universal accessories gives complete freedom in routing combined with exceptionally fast installation.

Features & Benefits

Only one threaded rod is needed to suspend tray. Suspension tube protects cables.6'' and 18'' Center Hangers have offset suspension tube to avoid center wire. Threaded rod, nuts and washers sold separately.Balanced loading recommended.

Specifications

General Info

Product Line	Cablofil	Finish	Pre-Galvanized
UPC Number	800388004382	Country Of Origin	China
Application Sector	Commercial, Industrial	Type	Supports

Dimensions

Product Width US	2.67 in	Product Weight US	1.28 lb
Product Volume US	0.16 cu ft	Product Depth US	17.48 in
Product Height US	5.91 in		

Additional Information

RoHS Compliant	Yes	Product Environmental Profile	Yes