Wiremold
DUAL SERVICE FURN. FEED COVER GRAY
Part No. 8814FFCTCGY

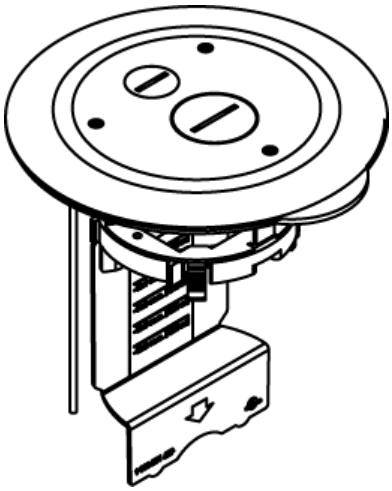

Wiremold® Ratchet-Pro™ Series Floor Boxes provide single- and dual-service capability in a variety of easy-to-install round floor boxes. These designs allow the flexibility for providing power, A/V or communication services to open-space areas in an aesthetic solution. Applications include malls, shopping centers, department stores, airports, hospitals, and office buildings. Ratchet-Pro™ Series Floor Boxes are cULus Listed for use in both on grade and above grade concrete construction.

Features & Benefits

Dual service furniture feed cover for Ratchet-Pro™ Series Floor Boxes.

Specifications

General Info

Product Line	Wiremold	UPC Number	786564074786
Country Of Origin	Mexico	Construction	Not Assembled
Application Sector	Commercial	Standard	cULus Listed Nonmetallic Outlet Boxes: File E110748 Guide QCMZ. Meets Article 314.27(C) of NEC.
Type	Floor Box		

Listing Agencies / 3rd Party Agencies

cULus ListingNumber	E110748	cULus Listed	Yes

Additional Information

RoHS Conformant	Yes

Technical Information

Cable Entry	Through Floor