Cablofil

1/4" THREADED ROD BEAM CLAMP-STAINLESS [941057]

Part No. 941057

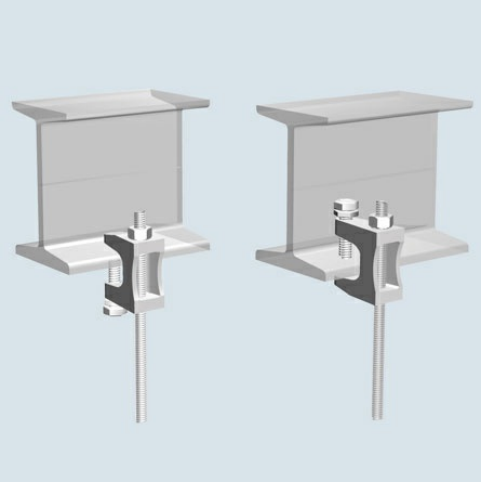

Cablofil Wiremesh Cable Tray concept based upon performance, safety and economy; three qualities which make Cablofil Wiremesh Cable Tray system preferred by installers. Cablofil adapts to the most complex configurations, and its structure gives maximum strength for minimum weight. The ease of creating fittings, carried out on site, as well as the wide range of unique and universal accessories gives complete freedom in routing combined with exceptionally fast installation.

Features & Benefits

Attaches threaded rod directly to I-beam.Threaded rod and nut are sold separately.Set screw and jam nut included.

Specifications

General Info

Product Line	Cablofil	Finish	Passivated
UPC Number	800388017443	Country Of Origin	China
Application Sector	Commercial, Industrial	Type	Accessories

Dimensions

Product Width US	0.669 in	Product Weight US	0.23 lb
Product Volume US	0.002 cu ft	Product Depth US	1.693 in
Product Height US	2.5 in		

Additional Information

RoHS Compliant	Yes	Product Environmental Profile	Yes