Cablofil
FAS UNIVERSAL BRACKET (2D,8W,18L)
Part No. 944865

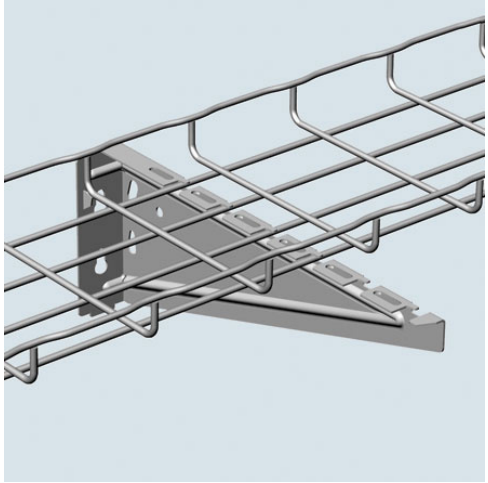

Cablofil Wiremesh Cable Tray concept based upon performance, safety and economy– three qualities which make Cablofil Wiremesh Cable Tray system preferred by installers. Cablofil adapts to the most complex configurations, and its structure gives maximum strength for minimum weight. The ease of creating fittings, carried out on site, as well as the wide range of unique and universal accessories gives complete freedom in routing combined with exceptionally fast installation.

Features & Benefits

Use for tray support in under floor application in combination with EDF Rail.Use patented locking tabs on FAS U to secure tray without additional hardware.Supports wider tray and heavier loads than FAS L. FAS U snaps directly into EDF rail.

Specifications

General Info

Product Line	Cablofil	Finish	Custom Painted
Country Of Origin	United States		

Dimensions

Product Weight US	2.425 lb

Additional Information

RoHS Compliant	Yes