Cablofil
FASUCB100BL FAS UNIVERSAL BRACKET 945366
Part No. 945366

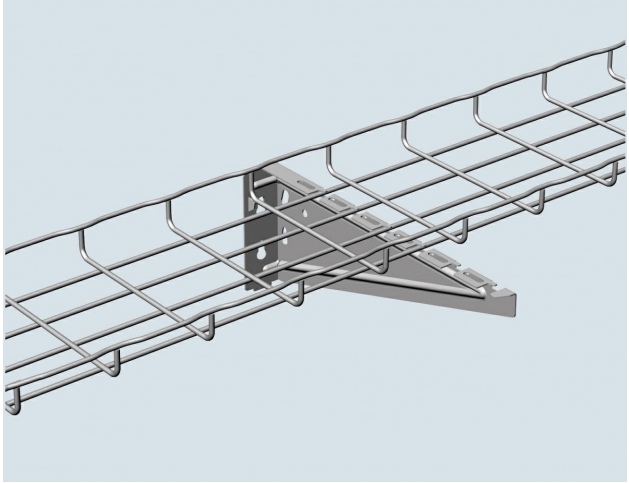

Cablofil Wiremesh Cable Tray concept based upon performance, safety and economy; three qualities which make Cablofil Wiremesh Cable Tray system preferred by installers. Cablofil adapts to the most complex configurations, and its structure gives maximum strength for minimum weight. The ease of creating fittings, carried out on site, as well as the wide range of unique and universal accessories gives complete freedom in routing combined with exceptionally fast installation.

Features & Benefits

Use for tray support in under floor application in combination with EDF Rail.Use patented locking tabs on FAS U to secure tray without additional hardware.Supports wider tray and heavier loads than FAS L. FAS U snaps directly into EDF rail.

Specifications

General Info

Product Line	Cablofil	Finish	Painted
UPC Number	800388009912	Country Of Origin	Italy
Installation Location	Wall	Application Sector	Commercial, Industrial
Type	Supports		

Dimensions

Product Width US	1.772 in	Product Weight US	0.264 lb
Product Volume US	0.015 cu ft	Product Depth US	5.15 in
Product Height US	2.87 in		

Buy American Act Compliance

BAA	Yes

Additional Information

RoHS Compliant	Yes