Cablofil
Trough FAS SPLICE WHITE (2H)
Part No. 960593

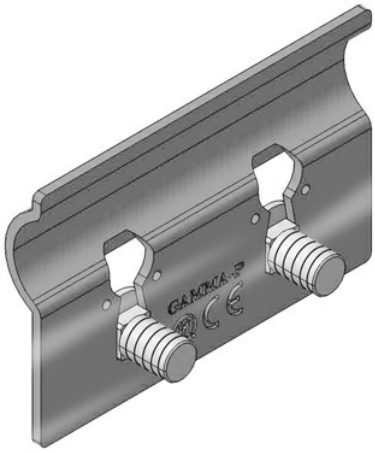

V-Trough cable tray keeps your cables protected and easy to manage. Its high-strength steel construction matches many European OEM specifications and is available in smaller sizes for control and instrumentation cabling. V-Trough is manufactured to exacting standards so that all components fit together perfectly, making installation a snap.

Features & Benefits

Hardware included. M6x12mm square neck carriage bolt (zinc plated) and M6 serrated flange hex nut (zinc plated).

Specifications

General Info

Product Line	Cablofil	Finish	Custom Painted
UPC Number	800388471870	Country Of Origin	Italy

Dimensions

Product Width US	2.75 in	Product Weight US	0.15 lb
Product Volume US	0.002 cu ft	Product Depth US	2.25 in
Product Height US	0.5 in		

Buy American Act Compliance

BAA	Yes