Cablofil
Flat Cover Connectors Channel-Style
Part No. P083048

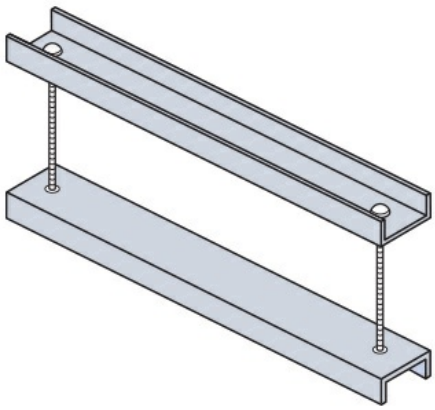

The aluminum I-beam design of ITray is perfect for industrial installations with large diameter cables in long span situations, minimizing total tray width and creating a smooth transition between straight sections and fittings. A structural offset in the sidewall creates strong, mid-span splices that need fewer supports. Each splice snaps in place and stays without holding, Additionally, only four bolts are needed for each splice reducing hardware needs by 50%. These features allow Itray to be installed up to 30% faster than standard tray.

Features & Benefits

For use with indoor, outdoor, or vertical flat covers.

Top and bottom pieces are 1 1/2'' wide.

Specifications

General Info

Product Line	Cablofil	Finish	Pre-Galvanized

Dimensions

Product Weight US	2.658 lb