Cablofil
Discontinued - Vertical Fitting Divider
Part No. P086391

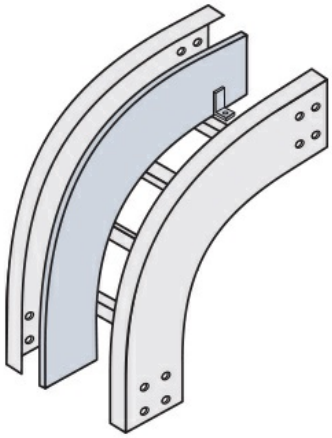

"The aluminum I-beam design of ITray is perfect for industrial installations with large diameter cables in long span situations, minimizing total tray width and creating a smooth transition between straight sections and fittings. A structural offset in the sidewall creates strong, mid-span splices that need fewer supports. Each splice snaps in place and stays without holding, Additionally, only four bolts are needed for each splice reducing hardware needs by 50%. These features allow Itray to be installed up to 30% faster than standard tray."

Features & Benefits

Designed to fit the exact radius of the fitting

Specifications

General Info

Product Line	Cablofil	Finish	Pre-Galvanized
UPC Number	800388517608	Country Of Origin	Mexico

Dimensions

Product Width US	1.063 in	Product Weight US	2.04 lb
Product Volume US	0.148 cu ft	Product Depth US	20.38 in
Product Height US	11.801 in		

Buy American Act Compliance

BAA	Yes