Cablofil
Support Brackets
Part No. P086458

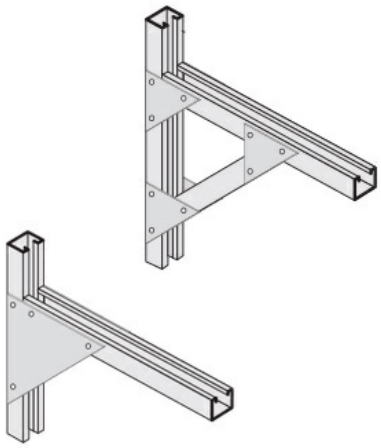

For extremely corrosive applications we offer a full line of straight sections, fittings, covers and mounting accessories in polyester and vinylester fiberglass. Rail heights are available in 4"" and 6"" and widths are available up to 36"".

Features & Benefits

Heavy gage steel construction

Specifications

General Info

Product Line	Cablofil	Finish	Other

Dimensions

Product Weight US	1.883 lb