Cablofil

Aluminum Expansion Guide Clamp w/Zinc-Plated Steel (10/BAG) (TRA)

Part No. P087847

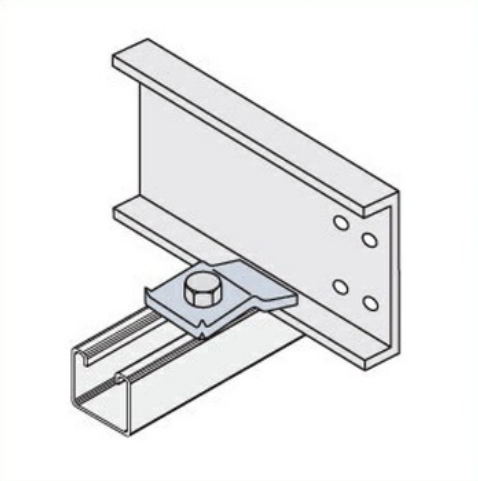

The aluminum I-beam design of ITray is perfect for industrial installations with large diameter cables in long span situations, minimizing total tray width and creating a smooth transition between straight sections and fittings. A structural offset in the sidewall creates strong, mid-span splices that need fewer supports. Each splice snaps in place and stays without holding, Additionally, only four bolts are needed for each splice reducing hardware needs by 50%. These features allow Itray to be installed up to 30% faster than standard tray.

Features & Benefits

Designed for use with all trays.

Specifications

General Info

Product Line	Cablofil	Finish	AL
UPC Number	800388046207	Country Of Origin	Mexico
Application Sector	Commercial, Industrial	Standard	UL Classified
Type	Cable Tray		

Dimensions

Product Weight US	12.1 lb

Buy American Act Compliance

BAA	Yes