Cablofil
Cable Dropout
Part No. P087865

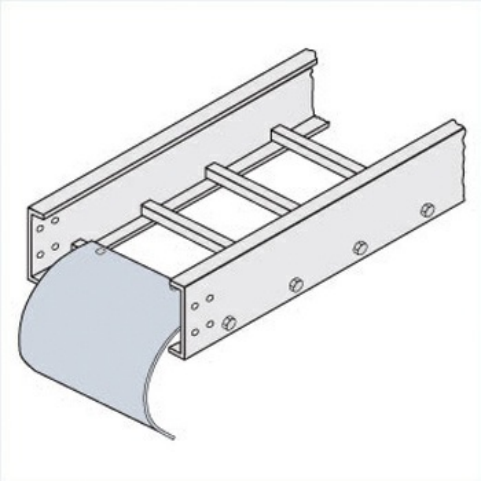

"The aluminum I-beam design of ITray is perfect for industrial installations with large diameter cables in long span situations, minimizing total tray width and creating a smooth transition between straight sections and fittings. A structural offset in the sidewall creates strong, mid-span splices that need fewer supports. Each splice snaps in place and stays without holding, Additionally, only four bolts are needed for each splice reducing hardware needs by 50%. These features allow Itray to be installed up to 30% faster than standard tray."

Features & Benefits

Fits directly onto rungs or trough end rungs

Specifications

General Info

Product Line	Cablofil	Finish	Aluminum
Country Of Origin	Mexico		

Dimensions

Product Weight US	0.37 lb