Cablofil
Outdoor Conversion Kit
Part No. P314613

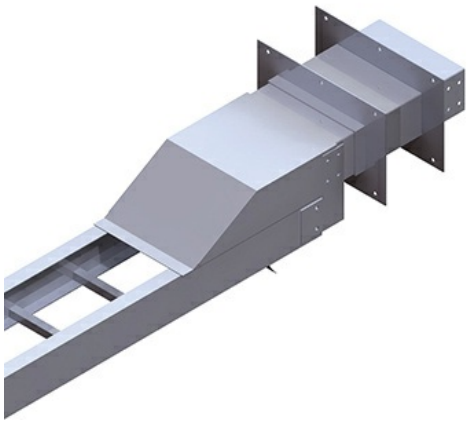

The aluminum I-beam design of ITray is perfect for industrial installations with large diameter cables in long span situations, minimizing total tray width and creating a smooth transition between straight sections and fittings. A structural offset in the sidewall creates strong, mid-span splices that need fewer supports. Each splice snaps in place and stays without holding, Additionally, only four bolts are needed for each splice reducing hardware needs by 50%. These features allow Itray to be installed up to 30% faster than standard tray.

Features & Benefits

Material: Aluminum Alloy 5052 - H32

Finish: Plain

Height (H): Tray height: 4'', 5'', 6'', 7''

Width (W): Tray width: 6'', 9'', 12'', 18'', 24'', 30'', 36''

Specifications

General Info

Product Line	Cablofil	Finish	AL
UPC Number	800388204973	Country Of Origin	Mexico

Dimensions

Product Width US	24.5 in	Product Weight US	9.896 lb
Product Volume US	2.909 cu ft	Product Depth US	19.881 in
Product Height US	10.319 in		

Buy American Act Compliance

BAA	Yes