Cablofil
Blind End Plate
Part No. P601078

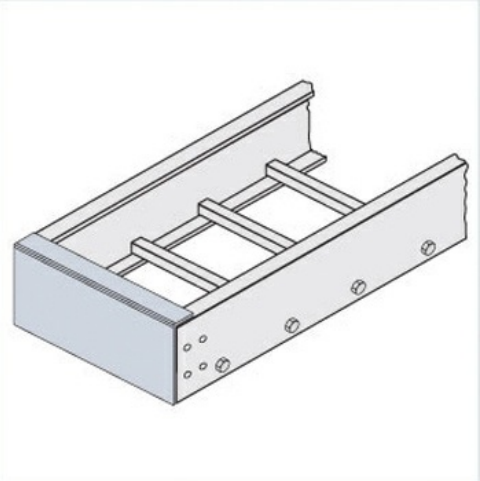

Choose from an extensive selection of metallic ladder tray with a variety of rung and bottom styles to choose from. Finishes include steel, 304L and 316L stainless steel to meet the needs of any application. Rail heights range from 4" to 7" and width sizes are available up to 36".

Features & Benefits

Includes Hardware

Specifications

General Info

Product Line	Cablofil	Finish	Stainless 316

Dimensions

Product Width US	8.75 in	Product Weight US	1.285 lb
Product Volume US	0.043 cu ft	Product Depth US	1.5 in
Product Height US	5.625 in		