Cablofil
Straight Horizontal Divider
Part No. P602289

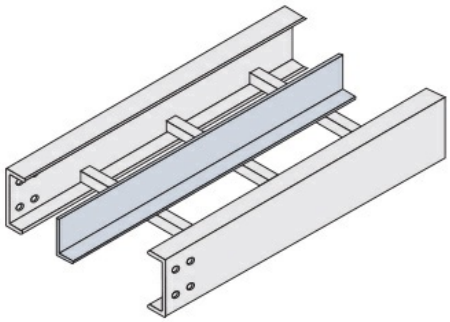

null

Features & Benefits

Straight strips are for use with all straight tray

Specifications

General Info

Product Line	Cablofil	Finish	S6
UPC Number	800388525504	Country Of Origin	Mexico
Application Sector	Commercial, Industrial	Type	Cable Tray

Dimensions

Product Width US	0.875 in	Product Weight US	4.508 lb
Product Volume US	0.201 cu ft	Product Depth US	144.0 in
Product Height US	2.75 in		

Buy American Act Compliance

BAA	Yes