Cablofil
Cable Dropout
Part No. P604148

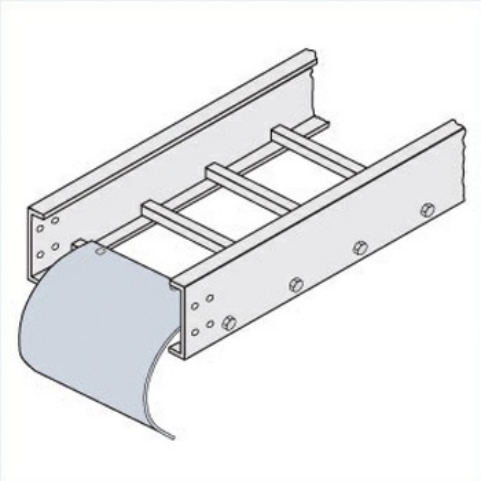

Choose from an extensive selection of metallic ladder tray with a variety of rung and bottom styles to choose from. Finishes include steel, 304L and 316L stainless steel to meet the needs of any application. Rail heights range from 4" to 7" and width sizes are available up to 36".

Features & Benefits

Smooth radius for cable drops

Specifications

General Info

Product Line	Cablofil	Finish	Pre-Galvanized

Dimensions

Product Width US	17.625 in	Product Weight US	1.354 lb
Product Volume US	0.042 cu ft	Product Depth US	2.75 in
Product Height US	1.494 in		