Cablofil
Tray-To-Box Connector, Frame Type
Part No. P644004

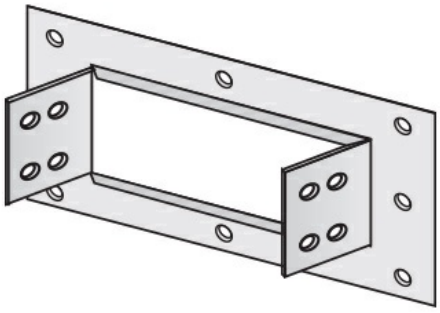

Finishes include steel and 316L stainless steel to meet the needs of any application. Rail heights range from 4"" to 7"".

Features & Benefits

All splices are supplied in pairs.

Type 316 stainless steel fasteners are standard on stainless steel systems, but are available as an option on all aluminum and steel systems.

Bonding jumpers are required for all expansion splice plates, adjustable connectors, and tray discontinuities.

Geomet fasteners are standard on aluminum and steel cable tray systems.

Sufficient connector pairs with fasteners are automatically included with each shipment of straight sections and fittings. Extras for field cuts or spares must be ordered separately.

Specifications

General Info

Product Line	Cablofil	Finish	S6
UPC Number	800388532663	Country Of Origin	Mexico

Dimensions

Product Width US	22.0 in	Product Weight US	1.305 lb
Product Height US	4.5 in		

Buy American Act Compliance

BAA	Yes