Wiremold
**RFBA 4-Gang Floor Box - On Grade**
Part No. RFBA4R30OG

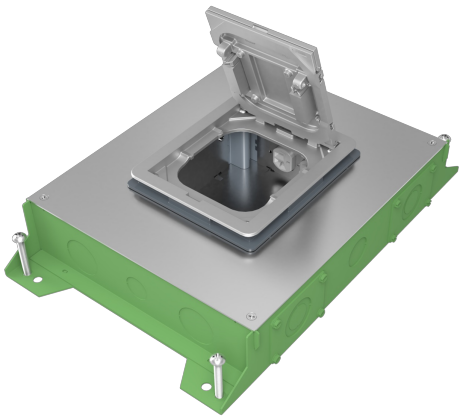

Your go-to floor box just got better. Resource RFB Series Floor Boxes are designed for maximum efficiency throughout an entire building, bringing versatile recessed activations for power and data services to open space areas or directly to workstations. No matter what size you choose, components and accessories work across the entire line interchangeably. Simply mix-and-match as needed for your project. Improved wire and cable routing makes wire pulling much easier in adjacent compartments and around corners. Available in 2-, 4-, 6- and 10-gang models with a variety of covers, colors and profiles.* Installs in tile, stone, carpet, terrazzo, wood and polished concrete. Perfect for many applications, including schools, financial institutions, commercial office buildings, hospitality and residential.

## Features & Benefits

One consistent design: Mix-and-match Resource RFBA Series Floor Boxes of any size with interchangeable components. Makes every project installation quick and efficient.

Improved wire and cable routing: Allows for easier wire pulling in adjacent compartments and around corners, reducing the overall cost for most cabling requirements.

Removable dividers post-pour: Fully adjustable before and after the concrete pour.

Universal sized conduit feed: Meets all requirements for each box. 2- and 4-gang shallow boxes accept a 1"" conduit feed, while all standard boxes accept a 2"" conduit feed.

Two finishes: Every box configuration is available in either a standard zinc-plated construction or a lightweight ""slab-on-grade"" finish with fusion-bonded epoxy corrosion resistant paint.

Adapts to most power and communication needs: Common mounting plates can be used for any of the Resource RFB Series Floor Boxes. Reduces overall life cycle cost.

## Specifications

### General Info

| | | | |
|---|---|---|---|
| Product Line | Wiremold | UPC Number | 786564105428 |
| Country Of Origin | Mexico | Installation Location | On Grade |
| Number of Knockouts | 20 | Application Sector | Commercial |
| Standard | UL514 | | |

### Dimensions

| | | | |
|---|---|---|---|
| Product Width US | 11.937 in | Product Depth US | 3.0 in |
| Knockout Size | 2 in | | |

## Listing Agencies / 3rd Party Agencies

| | | | |
|---|---|---|---|
| cULus ListingNumber | QCIT | cULus Listed | Yes |

## Buy American Act Compliance

| | |
|---|---|
| NAFTA | Yes |

## Additional Information

| | | | |
|---|---|---|---|
| RoHS Compliant | Yes | Product Has Potential to Contribute to LEED | Yes |
| Product Environmental Profile | Yes | | |

## Technical Information

| | | | |
|---|---|---|---|
| Floor Type | Concrete | Number of Gangs | 4 |
| Number of Compartments | 4 | Plenum | No |
| Indoor/Outdoor | Indoor | | |